Assembly & Installation Instructions: Conform K-Rail Adaptor, CONF-ADPT-KRAIL-S

Workrite ergonomics®

Parts Included

A K-Rail Mount
Qty: 1

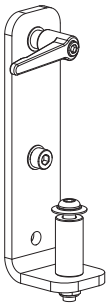

B 5 mm Allen Wrench
Qty: 1

C 2.5 mm Allen Wrench
Qty: 1

D 30 × 7 mm Static Arm Spacer
Qty: 1

E 37 × 6 mm Articulating Arm Spacer
Qty: 1

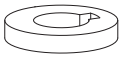

Required Parts Sold Separately

Conform Monitor Arm

Tools Required

Phillips head screwdriver, 2.5 mm Allen Wrench, 5 mm Allen Wrench

Do not exceed manufacturers weight limit for K-Rail.

1 Prepare K-Rail for Mount

Remove any caps or structure so that you can insert the K-Rail Mount onto the K-Rail from above.

2 Installing the K-Rail Mount onto K-Rail

a Loosen both of the bolts on the K-Rail Mount (A) to allow the unit to be slipped onto the K-Rail. The top Lock Bolt includes an adjustable (ratcheting) handle. Use the 5 mm Allen Wrench (B) for the bottom Stability Bolt.

b From above the K-Rail, align vertically then slide the T-nuts down the track to the desired height.

c Tighten the Stability Bolt using the 5 mm Allen Wrench (B) to provide lateral stability but still be movable up and down.

d Use the Adjustable Handle to lock the K-Rail Mount in desired height.

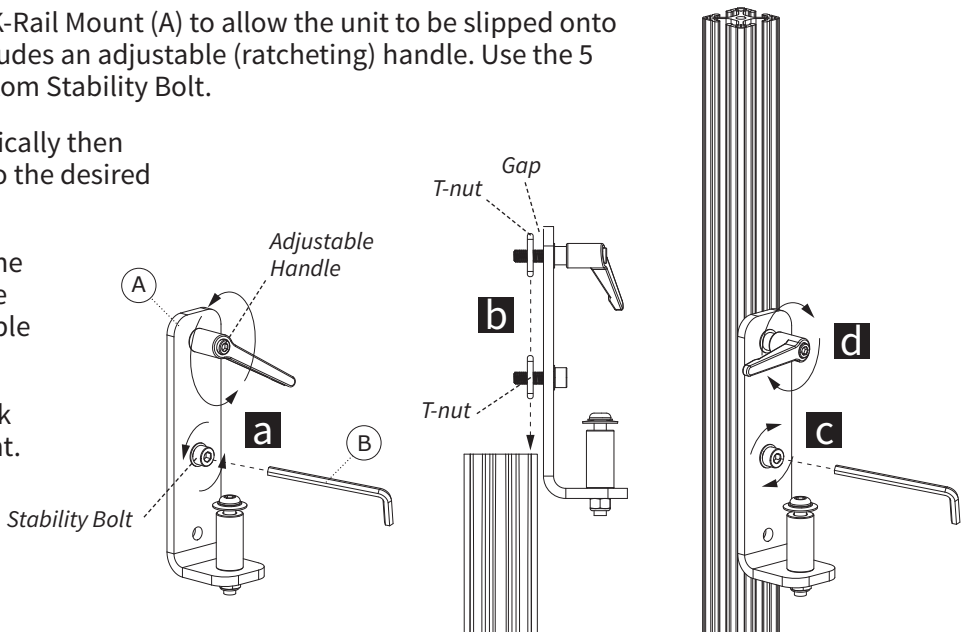

Loosen *Side view* *Tighten*

2 Preparing for Arm Installation

a Remove Bolt, Washers and Pin by unscrewing the Lock-Nut on the bottom of the mount.

b Choose the appropriate Spacer for either a Static Arm (D) or an Articulating Arm (E).

If you are using the Conform K-Rail Mount to attach a static arm, skip to **Step 4**.

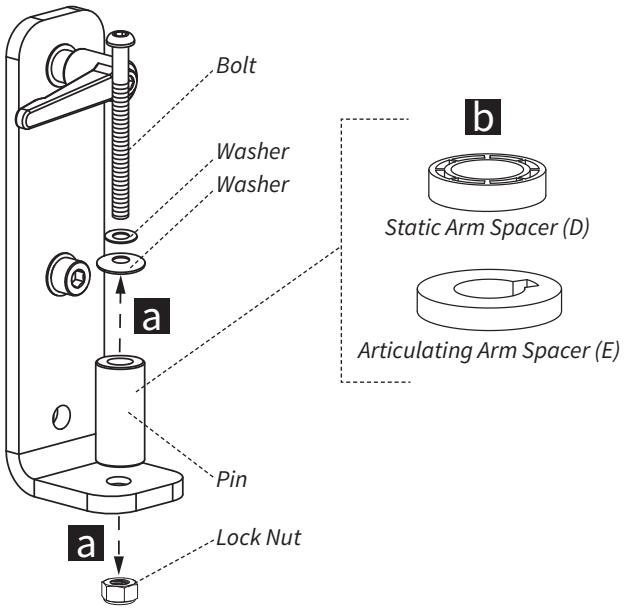

3 Install Conform Articulating Arm

a Remove the Cap from the base of the Articulating Arm.

b Insert the Bolt with Washers, Pin and Articulating Arm Spacer (E) through the bottom of the arm assembly and onto the mount as shown. Tighten with 5 mm Allen Wrench (B). Be sure the arm is tight but rotates freely.

Note: Align tooth in arm base with notch in Articulating Arm Spacer.

c Attach Lock Nut on bottom of Pin to set in place.

d Replace Cap on arm.

Your Arm is now ready to install a monitor. Follow the instructions that came with your Conform Monitor Arm to mount your monitor.

Note: The 2.5 mm Allen wrench is included to tighten the lock screw at the mid-section of the arm if necessary.

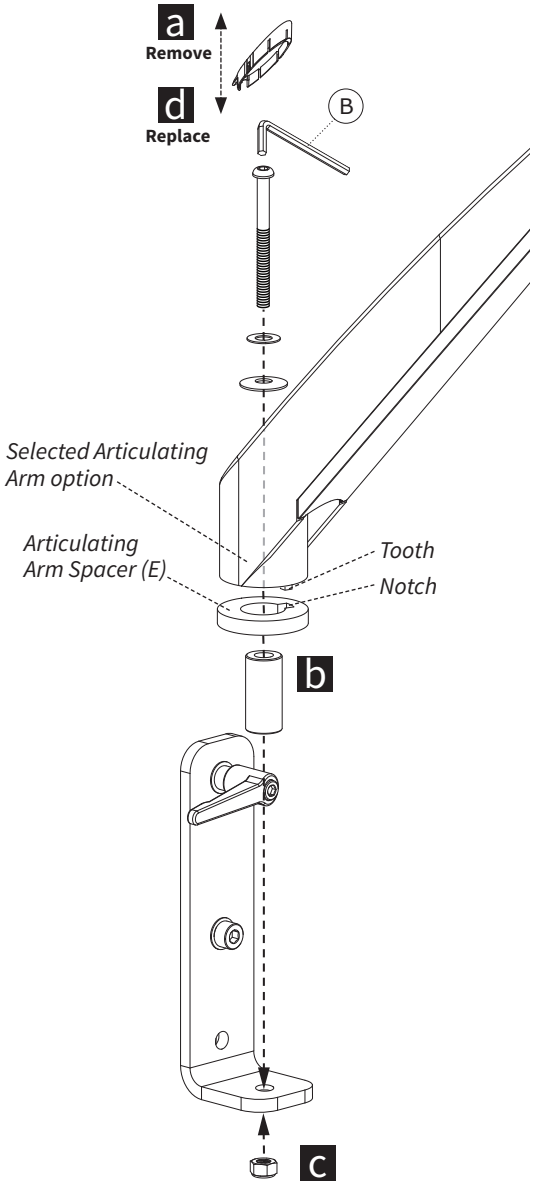

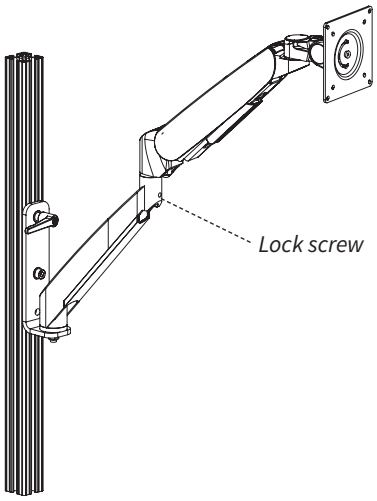

K-Rail with Articulating Arm

4 Install Conform Static Arm

a Remove the Cap from the selected arm.

b Insert the bolt with washers, pin and Static Arm Spacer (D) through the bottom of the arm assembly and onto the mount as shown. Tighten with 5 mm Allen Wrench (B). Be sure the arm is tight but rotates freely.

c Attach Lock Nut on bottom of Pin to set in place.

d Replace Cap on arm.

Your Arm is now ready to install a monitor or keyboard platform. Follow the instructions that came with your Conform Monitor Arm or keyboard platform for installation.

Note: The 2.5 mm Allen wrench is included to tighten the lock screw at the mid-section of the arm if necessary.

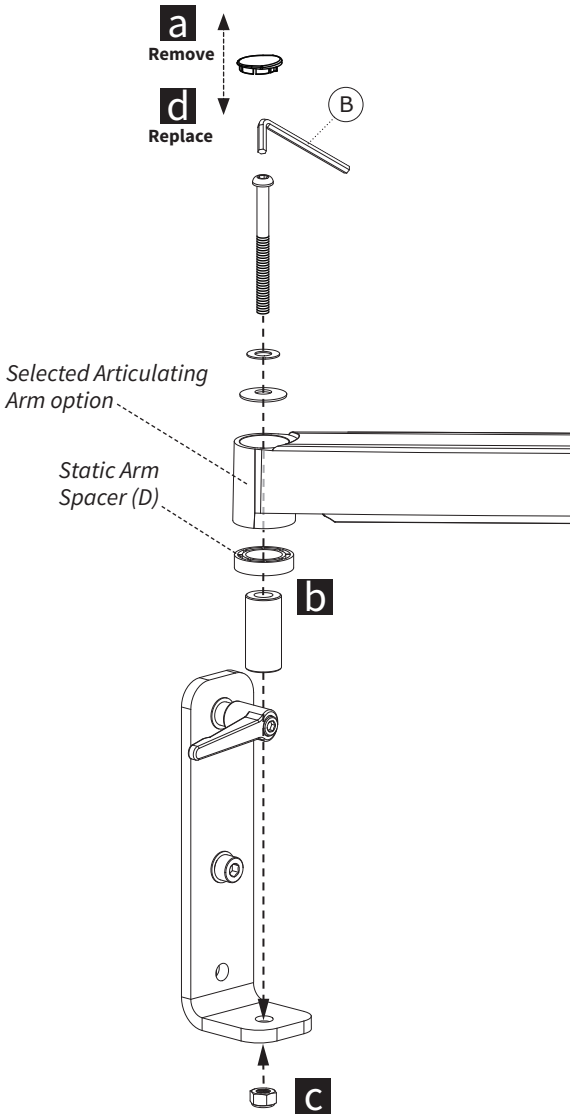

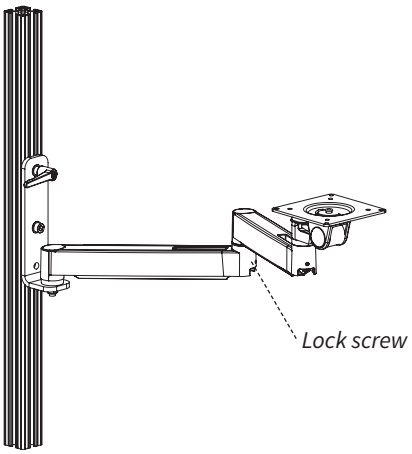

K-Rail with Static Arm

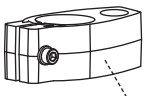

Note: The Pole Mount Adaptor that is provided with the Static Arm is not required for this installation application. Set aside for future use or discard.